Honeywell

MICRO SWITCH™ Electromechanical Safety Switches

GSS Series

004791

Issue 1

Datasheet

DESCRIPTION

Honeywell's MICRO SWITCH™ GSS Series electromechanical safety switches are comprised of different groups of safety switches designed to either EN50041 or EN50047 standards. GSS Series safety switches are agency certified for global applications, and feature positive opening normally closed contacts. The switch's red body color easily identifies the switch for safety applications. Although these switches are designed for safety applications, they can also be applied in non-safety applications.

The GSA Series metal limit switches are designed to the EN50041 standard with the 30 mm x 60 mm mounting pattern. Available with up to four contacts and a variety of actuator heads, the GSA Series limit switches are suitable for a wide variety of applications.

The GSC Series and GSE Series metal safety switches are designed with an integral hinge lever. The body of the switch is designed to the EN50047 standard with 20 mm to 22 mm mounting. For applications requiring a similar safety switch to the EN50047 standard with a high-strength thermoplastic housing and the integral hinge lever, the GSD Series safety switch can fill the need for this requirement. Where there is limited space on equipment or machinery, the GSC and GSD Series switches with the smaller housing are the preferred solution. As an alternative, the GSC, GSD, and GSE Series can be supplied with the traditional style of side rotary lever or top plunger actuation.

VALUE TO CUSTOMERS

- Operating heads can be rotated in 90° increments for installation flexibility
- All NC contacts (normally closed contacts) are positive opening when actuated
- Removable contact block for ease of wiring

FEATURES

- Epoxy coated metal zinc housing (GSA Series, GSC Series, or GSE Series)
- Glass-reinforced thermoplastic housing (GSD Series)
- Red body color for easy safety recognition
- Mounting to EN50041 (GSA Series), or EN50047 (GSC Series, GSD Series, and GSE Series)
- Choice of head/actuator types: pin plunger, roller plunger, side rotary standard lever, side rotary offset lever, top roller lever, or hinge lever
- Wide selection of NC (normally closed) and NO (normally open) contact options
- Different threaded conduit options for global applications
- Environmentally sealed for indoor or outdoor applications
- CE, CSA, and UL agency certifications
- Designed and agency evaluated for safety functions up to and including a SIL3 level (GSA and GSD Hinge Lever)

POTENTIAL APPLICATIONS

- Gates, guards, or doors for:
  - Agricultural and construction equipment
  - Die cast machinery
  - Elevators and moving stairs
  - Machine tools
  - Material handling
  - Packaging machinery
  - Plastic molding machinery
  - Scissor/platform lifts
  - Special purpose machinery

DIFFERENTIATION

- Up to four electrically independent contacts for control and monitoring as required
- Gold contacts available for low energy applications
- Side rotary actuator incorporates dual bearing design for increased life
- Specialty contact option, sequential action (GSA Series)
- Catalog listings designed and evaluated up to and including a safety integrity level 3 (SIL3) per IEC 61508-2:2010 (GSA Series and GSD Hinge Lever Series)

PORTFOLIO

Honeywell offers other non-interlocking safety switches, non-contact safety switches (FF Series) and cable/rope-pull safety switches (1CPS & 2CPS Series). Honeywell safety interlocking switches include the metal EN50041 GK Series, metal solenoid GKL/R Series, miniature plastic GKM Series, EN50047 plastic body GKE Series, and plastic body GKN Series.

Table 1. Specifications

Characteristic	Parameter
Description	GSA Safety Switch Series: EN50041 mounting (30 mm x 60 mm) GSC/GSD/GSE Safety Switch Series: EN50047 mounting (20 mm to 22 mm)
Certifications	CE; DOC # 231, EN/IEC 60947-5-1 CSA; File 57323, CSA C22.2 No. 14 UL; File E37138, UL508
Housing material	GSA/GSC/GSE Series; electrostatic epoxy coated die-cast zinc GSD Series; high strength glass-filled thermoplastic
Actuator heads	GSA Series: Side rotary, top pin plunger, top roller plunger, top roller lever GSC/GSD/GSE Series: hinge lever positioned at left, top, or right position
Conduit/electrical connection[1]	0.5-14 NPT; 20 mm; PG 13,5; G1/2 (PF1/2)
Contact/switch options[2]	GLA & GLE Series; 1NC/1NO, 2NC, 2NC/2NO, 3NC/1NO, 4NC GLC & GLD Series; 1NC/1NO, 2NC
Contact type	Snap action, snap action sequential (2 step), slow action break-before-make (BBM), slow action make-before-break (MBB), slow action
Contact design	Double break, electrically separated
Contact material	Silver alloy (standard), gold-plated (low energy applications)
Utilization category	AC-15, A300/A600[3]; DC-13, Q300
Rated operational voltage (Ue)	240 Vac, 600 Vac, 250 Vdc
Rated operational current (Ie)	3 A, 1.2 A, 0.27 A
Thermal current (Ith)	10 A
Rated insulation voltage (Ui)	300 V, 600 V
Rated impulse withstand voltage (Uimp)	2500 V
Short circuit protective device (SCPD)	Class J fuse (10 A/600 V)
Pollution degree	3
Environmental sealing	GSA Series (metal body): IP67, NEMA 1, 4, 12, and 13 GSC & GSE Series (metal body): IP66, NEMA 1, 4, 12, and 13 GSD Series (plastic body): IP66/67, NEMA 1, 4X (indoor), 12, and 13
Operating temperature	GSA Series with side rotary actuator head: -40 °C to 85 °C [-40 °F to 185 °F] GSA Series without side rotary actuator head: -25 °C to 85 °C [-13 °F to 185°F] GSC/GSD/GSE Series: -25 °C to 85 °C [-13 °F to 185°F]
Shock	50 G per IEC 60068-2-27
Vibration	10 G per IEC 60068-2-6
MCTF (Mechanical life)	GSA Series: >1,000,000 cycles with single-sided confidence limit of 100% GSD Series (hinge lever actuator): >1,000,000 cycles
MCTF (Electrical life)	GSA Series: >25,000 cycles with single-sided confidence limit of 100% GSD Series (hinge lever actuator): >25,000 cycles with single-sided confidence limit of 100%
SIL capability	GSA & GSD Series (hinge lever actuator); IEC 61508-2:2010; SIL2 capable with HFT=0*; SIL3 capable with HFT=1*
Proof test interval	1 year

[1]GSE Series has three (3) threaded conduits.

[2]All normally closed (NC) contacts are positive opening ⊕.

[3]A600 for GSA Series only. GSA Series with 2NC contacts (06 or 36 switch code) limited to A300.

* Hardware Fault Tolerance (HFT)

Table 2. Electrical Rating

ac				dc				gold-plated contacts
A300/A600**	AC15							
Ue	Ie	VA Rating		Ue	Ie	VA Rating		1 V 10 µA min.
Volts	Amps	Make	Break	Volts	Amps	Make	Break	50 V 100 mA max.
120	6	7200	720	24	2.8	69	69	
240	3	7200	720	125	0.55	69	69	
380*	1.9	7200	720	250	0.27	69	69	
480*	1.5	7200	720					
500*	1.4	7200	720					
600*	1.2	7200	720					

*GSA Series only. GSA Series with 2NC contacts (06 or 36 switch code) limited to A300.

Figure 1. GSA Safety Switch Application

Two GSA limit switches used to monitor gate position.

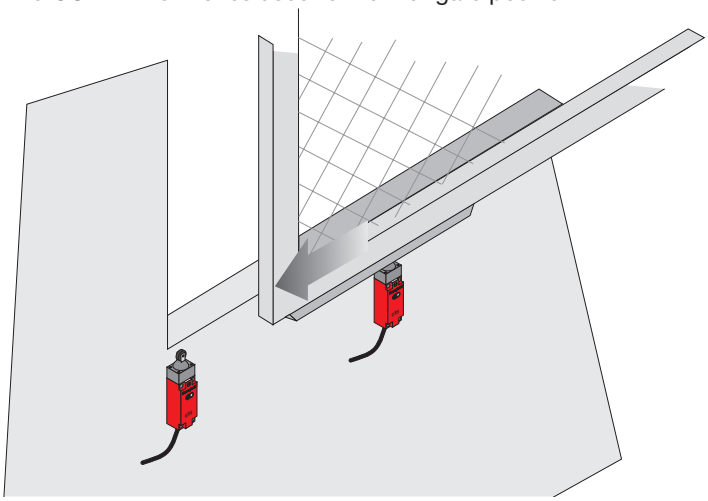

Figure 2. GSS Hinge Safety Switch Application

Hinge-lever safety switches used to monitor gate position.

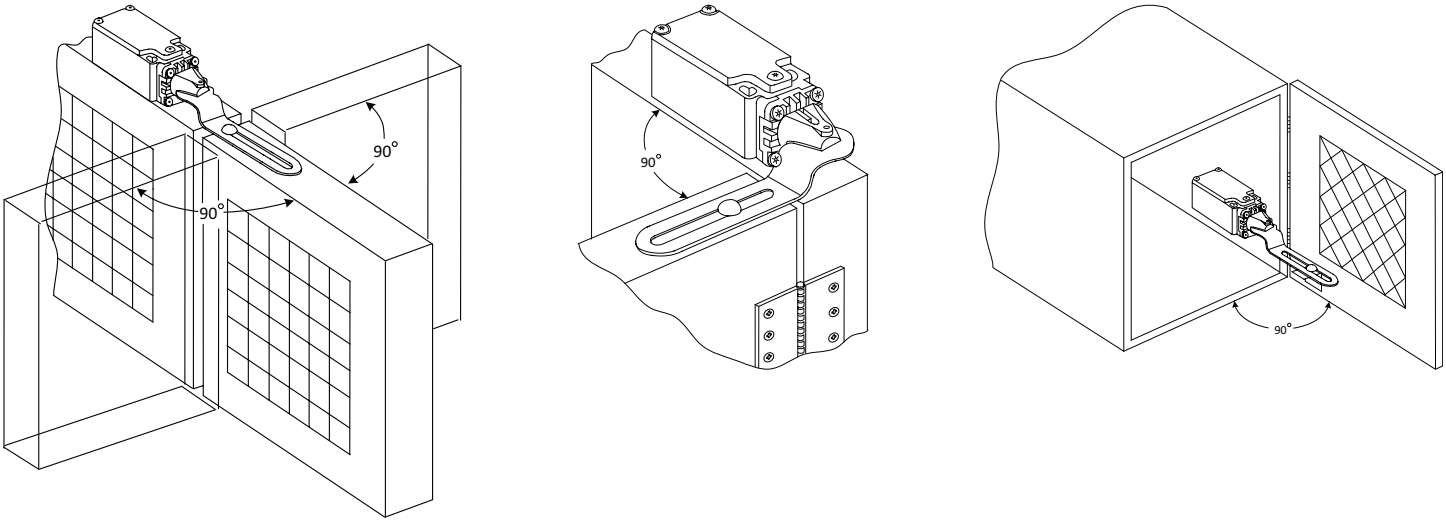

Figure 3. Product Nomenclature: GSA Series Safety Switch

GSA **C** **01** **A1** **A**

Switch Type	Conduit		Switch Code			Head/Actuator	Roller Material	Modification Codes
GSA Series Safety Limit Switch	**A**	1/2-14 NPT	**01**	SPDT snap action	**34**	SPDT, MBB slow action gold contacts	**A1** Side rotary, fixed length lever	None (blank)	Standard orientation & switching
	B	PG 13.5	**03**	SPDT, BBM slow action	**36**	2NC slow action, gold contacts	**A5** Side rotary. offset lever	**A** Plastic roller	**1** CW rotation only
	C	M20 x 1.5	**04**	SPDT, MBB slow action	**40**	4NC, slow action	**B** Top pin plunger	**B** Metal roller	**2** CCW rotation only
	D	G 1/2 (PF 1/2)	**06**	2NC slow action	**41**	4NC, slow action, gold contacts	**C** Top roller plunger		**3** Lever to right
			07	SPDT, snap action, gold contacts	**42**	2NC/1NO, BBM slow action	**D** Top roller lever		**4** Lever to left
			20	DPDT, snap action	**43**	2NC/1NO, BBM slow action, gold contacts	**R** Top roller ball		**5** Lever to mounting surface
			21	DPDT, snap action, sequential	**44**	2NC/2NO, BBM slow action			**6** Head with roller perpendicular to mtg surface
			22	DPDT, snap action, gold contacts	**45**	2NC/2NO, BBM slow action, gold contacts			
			28	DPDT, snap action, sequen. gold contacts	**46**	3NC/1NO, BBM slow action			
			33	SPDT, BBM slow action gold contacts	**47**	3NC/1NO, BBM slow action, gold contacts			

Figure 4. Product Nomenclature: GSS Series Hinge Safety Switch

GS **D** **A** **03** **S** **3**

Switch Type	Body Code	Conduit Thread	Switch Code: GSC, GSD, and GSE		Switch Code: GSE only		Actuator Code	
GSS Series Hinge Lever Safety Limit Switch	**C** Zinc die-cast body & head	**A** 1/2 NPT x 14	**01**	SPDT, snap action	**40**	4NC, BBM slow action	**1**	Lever to left
	D Red thermoplastic body & zinc die-cast head	**B** PG 13.5	**07**	SPDT, snap action gold contacts	**41**	4NC, BBM, slow action, gold contacts	**2**	Lever to top
	E Zinc die-cast body & head, 3 conduit	**C** M20 x 1.5	**03**	SPDT, BBM slow action	**42**	2NC/1NO, BBM slow action	**3**	Lever to right
		D G 1/2 (PF 1/2)	**33**	Slow action, BBM, gold contacts	**43**	2NC/1NO, BBM slow action, gold contacts	**4**	No lever
			06	2NC slow action	**44**	2NC/2NO, BBM slow action		
			36	2NC slow action, gold contacts	**45**	2NC/2NO, BBM slow action, gold contacts		
					46	3NC/1NO, BBM slow action		
					47	3NC/1NO, BBM slow action, gold contacts		

MICRO SWITCH™ Electromechanical Safety Switches, GSS Series

Figure 5. GSS Series Product Circuitry/Switch Code

Available for GSA Switches Only

01 07	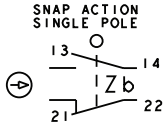
03 33	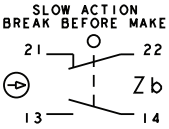
04 34	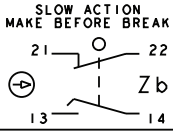
06 36	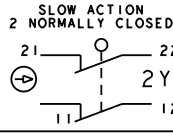
20 22	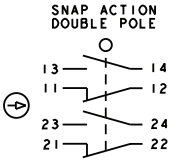
21 28	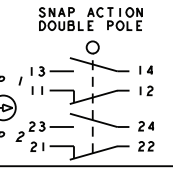
40 41	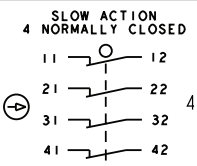
42 43	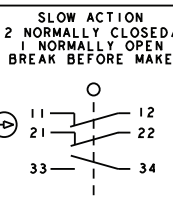
44 45	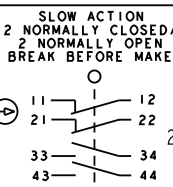
46 47	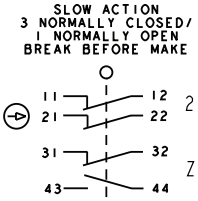

Available for GSC, GSD, and GSE Switches

	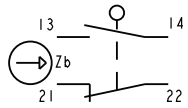
01	SNAP-ACTION CONTACTS
07	SNAP-ACTION CONTACTS (GOLD PLATED CONTACTS)
	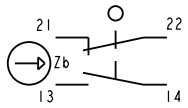
03	SLOW-ACTION CONTACTS (BREAK BEFORE MAKE)
33	SLOW-ACTION CONTACTS (BREAK BEFORE MAKE) (GOLD PLATED CONTACTS)
	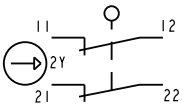
06	SLOW-ACTION CONTACTS (2 NORMALLY CLOSED)
36	SLOW-ACTION CONTACTS (2 NORMALLY CLOSED) (GOLD PLATED CONTACTS)

Available for GSE Switches Only

	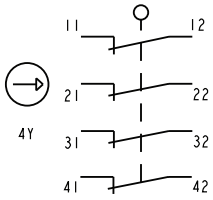
40	SLOW-ACTION CONTACTS (BREAK BEFORE MAKE)
41	SLOW-ACTION CONTACTS (BREAK BEFORE MAKE) (GOLD PLATED CONTACTS)
	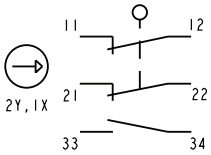
42	SLOW-ACTION CONTACTS (BREAK BEFORE MAKE)
43	SLOW-ACTION CONTACTS (BREAK BEFORE MAKE) (GOLD PLATED CONTACTS)
	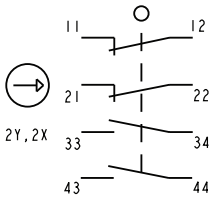
44	SLOW-ACTION CONTACTS (BREAK BEFORE MAKE)
45	SLOW-ACTION CONTACTS (BREAK BEFORE MAKE) (GOLD PLATED CONTACTS)
	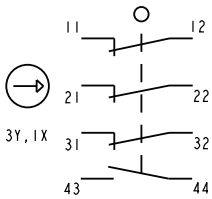
46	SLOW-ACTION CONTACTS (BREAK BEFORE MAKE)
47	SLOW-ACTION CONTACTS (BREAK BEFORE MAKE) (GOLD PLATED CONTACTS)

Table 3. GSA Safety Switch (Side Rotary) with 0.5-14NPT Conduit Order Guide

	Catalog Listing 0.5-14 NPT Conduit*	Head and Lever Type	Contacts	Contact Mate-rial	Operating Torque max.	Bar Chart (degrees) ■ contact closed ☐ contact open
	GSAA01A1B	Side rotary with 38,1 mm [1.5 in] lever with steel roller	1NC/1NO snap action	Silver alloy	0,330 Nm [2.9 in-lb]	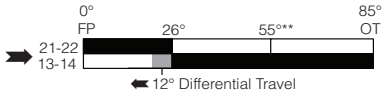
	GSAA04A1B	Side rotary with 38,1 mm [1.5 in] lever with steel roller	1NC/1NO slow action, MBB	Silver alloy	0,330 Nm [2.9 in-lb]	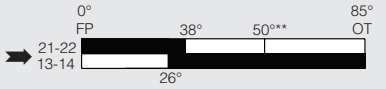
	GSAA06A1B	Side rotary with 38,1 mm [1.5 in] lever with steel roller	2NC slow action	Silver alloy	0,330 Nm [2.9 in-lb]	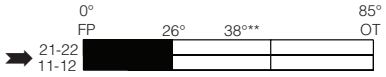
	GSAA36A1B	Side rotary with 38,1 mm [1.5 in] lever with steel roller	2NC slow action	Gold plated	0,330 Nm [2.9 in-lb]	
	GSAA20A1B	Side rotary with 38,1 mm [1.5 in] lever with steel roller	2NC/2NO snap action	Silver alloy	0,330 Nm [2.9 in-lb]	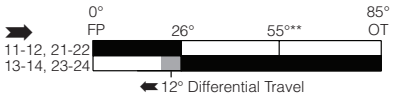
	GSAA22A1B	Side rotary with 38,1 mm [1.5 in] lever with steel roller	2NC/2NO snap action	Gold plated	0,330 Nm [2.9 in-lb]	
	GSAA42A1B	Side rotary with 38,1 mm [1.5 in] lever with steel roller	2NC/1NO slow action, BBM	Silver alloy	0,330 Nm [2.9 in-lb]	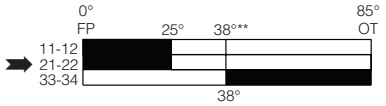
	GSAA44A1B	Side rotary with 38,1 mm [1.5 in] lever with steel roller	2NC/2NO slow action, BBM	Silver alloy	0,330 Nm [2.9 in-lb]	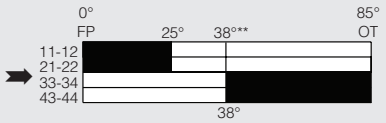
	GSAA47A1B	Side rotary with 38,1 mm [1.5 in] lever with steel roller	3NC/1NO slow action, BBM	Gold plated	0,330 Nm [2.9 in-lb]	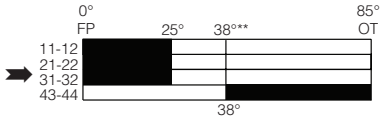
	GSAA40A1B	Side rotary with 38,1 mm [1.5 in] lever with steel roller	4NC slow action	Silver alloy	0,330 Nm [2.9 in-lb]	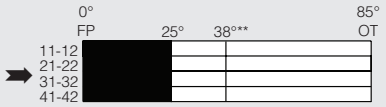
	GSAA41A1B	Side rotary with 38,1 mm [1.5 in] lever with steel roller	4NC slow action	Gold plated	0,330 Nm [2.9 in-lb]	
	GSAA01A5B	Side rotary with 38,1mm [1.5 in] offset lever with steel roller	1NC/1NO snap action	Silver alloy	0,330 Nm [2.9 in-lb]	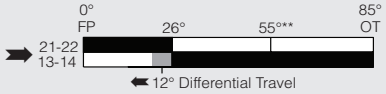

*Other conduit options are available, reference Product Nomenclature on page 4.

**Positive opening occurs.

MICRO SWITCH™ Electromechanical Safety Switches, GSS Series

Table 4. GSA Safety Switch (Top Plunger) with 0.5-14NPT Conduit Order Guide

	Catalog Listing 0.5-14 NPT Conduit*	Head and Lever Type	Contacts	Contact Mate-rial	Operating Force max.	Bar Chart (mm) ■ contact closed □ contact open
	GSAA01B	Top pin plunger	1NC/1NO snap action	Silver alloy	16 N [3.6 lb]	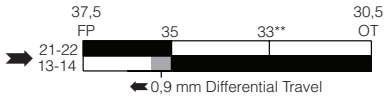
	GSAA20B	Top pin plunger	2NC/2NO snap action	Silver alloy	16 N [3.6 lb]	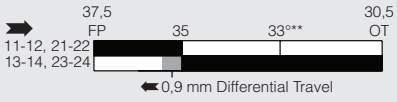
	GSAA22B	Top pin plunger	2NC/2NO snap action	Gold plated	16 N [3.6 lb]	
	GSAA42B	Top pin plunger	2NC/1NO slow action, BBM	Silver alloy	16 N [3.6 lb]	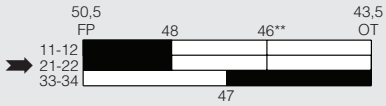
	GSAA01C	Top roller plunger	1NC/1NO snap action	Silver alloy	16 N [3.6 lb]	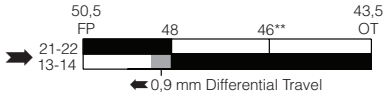
	GSAA07C	Top roller plunger	1NC/1NO snap action	Gold plated	16 N [3.6 lb]	
	GSAA36C	Top roller plunger	2NC slow action	Gold plated	16 N [3.6 lb]	
	GSAA20C	Top roller plunger	2NC/2NO snap action	Silver alloy	16 N [3.6 lb]	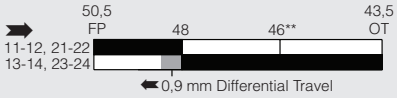
	GSAA22C	Top roller plunger	2NC/2NO snap action	Gold plated	16 N [3.6 lb]	
	GSAA28C	Top roller plunger	2NC/2NO snap action, sequential (2 step)	Gold plated	16 N [3.6 lb]	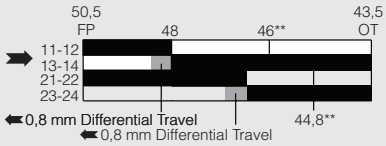
	GSAA43C	Top roller plunger	2NC/1NO slow action, BBM	Gold plated	16 N [3.6 lb]	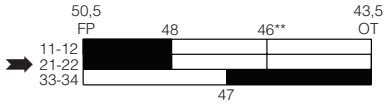
	GSAA47C	Top roller plunger	3NC/1NO slow action, BBM	Gold plated	16 N [3.6 lb]	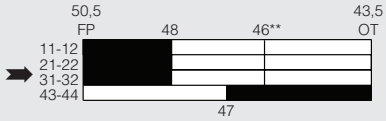
	GSAA40C	Top roller plunger	4NC slow action	Silver alloy	16 N [3.6 lb]	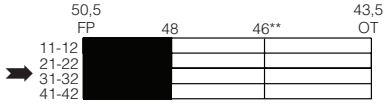
	GSAA01D	Top roller lever	1NC/1NO snap action	Silver alloy	9.5 N [2.1 lb]	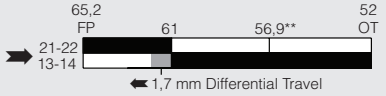
	GSAA20D	Top roller lever	2NC/2NO snap action	Silver alloy	9.5 N [2.1 lb]	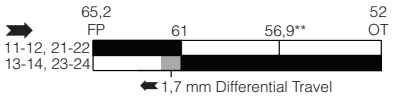

*Other conduit options are available, reference Product Nomenclature on page 4.
**Positive opening occurs.

Table 5. GSC, GSD, GSE Safety Switch (Hinge) with 0.5-14NPT Conduit Order Guide

	Catalog Listing with 0.5-14 NPT Conduit*	Hinge Lever Position on Head (safety contacts closed)	Body Material	Contacts	Contact Material	Operating Torque max.	Bar Chart (degrees) ■ contact closed ☐ contact open
	GSCA01S1	Left	Metal	1NC/1NO snap action	Silver alloy	0,12 Nm [1.1 in-lb]	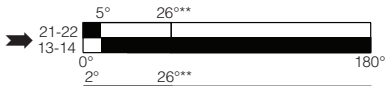
	GSCA07S1	Left	Metal	1NC/1NO snap action	Gold plated	0,12 Nm [1.1 in-lb]	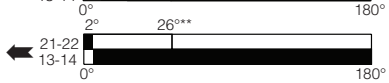
	GSCA03S1	Left	Metal	1NC/1NO slow action, BBM	Silver alloy	0,12 Nm [1.1 in-lb]	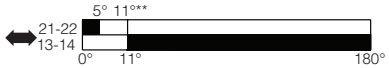
	GSCA33S1	Left	Metal	1NC/1NO slow action, BBM	Gold plated	0,12 Nm [1.1 in-lb]	
	GSCA06S1	Left	Metal	2NC slow action	Silver alloy	0,12 Nm [1.1 in-lb]	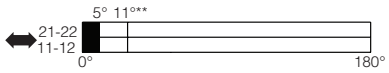
	GSCA01S2	Top	Metal	1NC/1NO snap action	Silver alloy	0,12 Nm [1.1 in-lb]	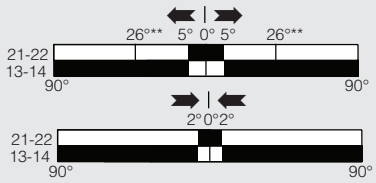
	GSCA03S2	Top	Metal	1NC/1NO slow action, BBM	Silver alloy	0,12 Nm [1.1 in-lb]	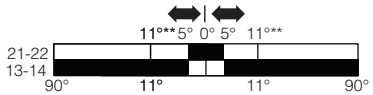
	GSCA06S2	Top	Metal	2NC slow action	Silver alloy	0,12 Nm [1.1 in-lb]	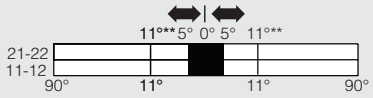
	GSCA36S2	Top	Metal	2NC slow action	Gold plated	0,12 Nm [1.1 in-lb]	
	GSCA01S3	Right	Metal	1NC/1NO snap action	Silver alloy	0,12 Nm [1.1 in-lb]	
	GSCA07S3	Right	Metal	1NC/1NO snap action	Gold plated	0,12 Nm [1.1 in-lb]	
	GSCA03S3	Right	Metal	1NC/1NO slow action, BBM	Silver alloy	0,12 Nm [1.1 in-lb]	
	GSCA06S3	Right	Metal	2NC slow action	Silver alloy	0,12 Nm [1.1 in-lb]	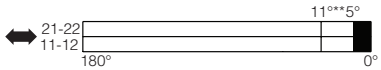

*Other conduit options are available, reference Product Nomenclature on page 4.
** Positive opening occurs.

Table 5. GSC, GSD, GSE Safety Switch (Hinge) with 0.5-14NPT Conduit Order Guide, continued

	Catalog Listing with 0.5-14 NPT Conduit*	Hinge Lever Position on Head (safety contacts closed)	Body Material	Contacts	Contact Material	Operating Torque max.	Bar Chart (degrees) ■ contact closed ☐ contact open
	GSDA01S1	Left	Plastic	1NC/1NO snap action	Silver alloy	0,12 Nm [1.1 in-lb]	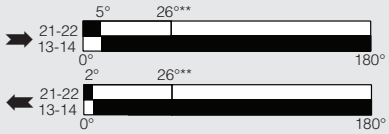
	GSDA03S1	Left	Plastic	1NC/1NO slow action, BBM	Silver alloy	0,12 Nm [1.1 in-lb]	
	GSDA06S1	Left	Plastic	2NC slow action	Silver alloy	0,12 Nm [1.1 in-lb]	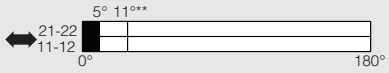
	GSDA01S2	Top	Plastic	1NC/1NO snap action	Silver alloy	0,12 Nm [1.1 in-lb]	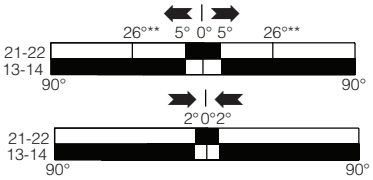
	GSDA03S2	Top	Plastic	1NC/1NO slow action, BBM	Silver alloy	0,12 Nm [1.1 in-lb]	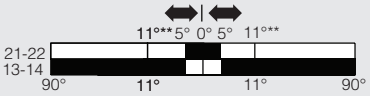
	GSDA06S2	Top	Plastic	2NC slow action	Silver alloy	0,12 Nm [1.1 in-lb]	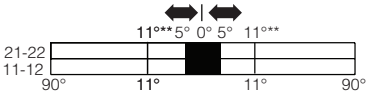
	GSDA01S3	Right	Plastic	1NC/1NO snap action	Silver alloy	0,12 Nm [1.1 in-lb]	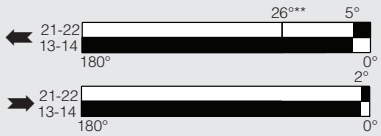
	GSDA03S3	Right	Plastic	1NC/1NO slow action, BBM	Silver alloy	0,12 Nm [1.1 in-lb]	
	GSDA06S3	Right	Plastic	2NC slow action	Silver alloy	0,12 Nm [1.1 in-lb]	

*Other conduit options are available, reference Product Nomenclature on page 4.
** Positive opening occurs.

Table 5. GSC, GSD, GSE Safety Switch (Hinge) with 0.5-14NPT Conduit Order Guide, continued

	Catalog Listing with 0.5-14 NPT Conduit*	Hinge Lever Position on Head (safety contacts closed)	Body Material	Contacts	Contact Material	Operating Torque max.	Bar Chart (degrees) ■ contact closed ☐ contact open
Three Conduits 	GSEA44S1	Left	Metal	2NC/2NO slow action, BBM	Silver alloy	0,12 Nm [1.1 in-lb]	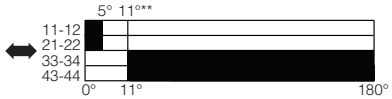
	GSEA46S1	Left	Metal	3NC/1NO slow action, BBM	Silver alloy	0,12 Nm [1.1 in-lb]	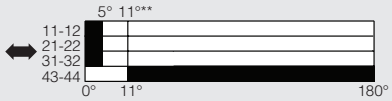
	GSEA41S1	Left	Metal	4NC slow action	Gold-plated	0,12 Nm [1.1 in-lb]	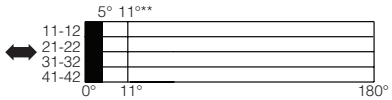
	GSEA44S2	Top	Metal	2NC/2NO slow action, BBM	Silver alloy	0,12 Nm [1.1 in-lb]	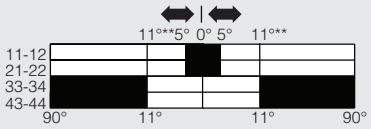
	GSEA46S2	Top	Metal	3NC/1NO slow action, BBM	Silver alloy	0,12 Nm [1.1 in-lb]	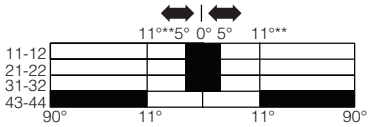
	GSEA40S2	Top	Metal	4NC slow action	Silver alloy	0,12 Nm [1.1 in-lb]	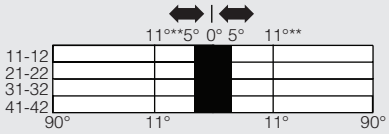
	GSEA41S2	Top	Metal	4NC slow action	Gold-plated	0,12 Nm [1.1 in-lb]	
	GSEA44S3	Right	Metal	2NC/2NO slow action, BBM	Silver alloy	0,12 Nm [1.1 in-lb]	
	GSEA46S3	Right	Metal	3NC/1NO slow action, BBM	Silver alloy	0,12 Nm [1.1 in-lb]	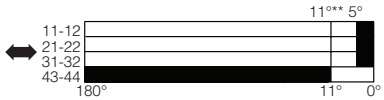
	GSEA41S3	Right	Metal	4NC slow action	Gold-plated	0,12 Nm [1.1 in-lb]	

*Other conduit options are available, reference Product Nomenclature on page 4.
** Positive opening occurs.

Figure 4. GSC/GSD Side Rotary (Head Code A1) Dimensions

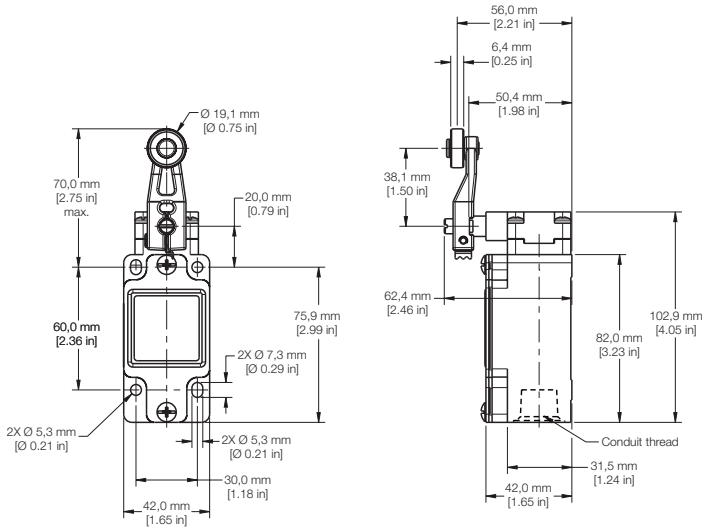

Figure 5. GSC/GSD Side Rotary (Head Code A5) Dimensions

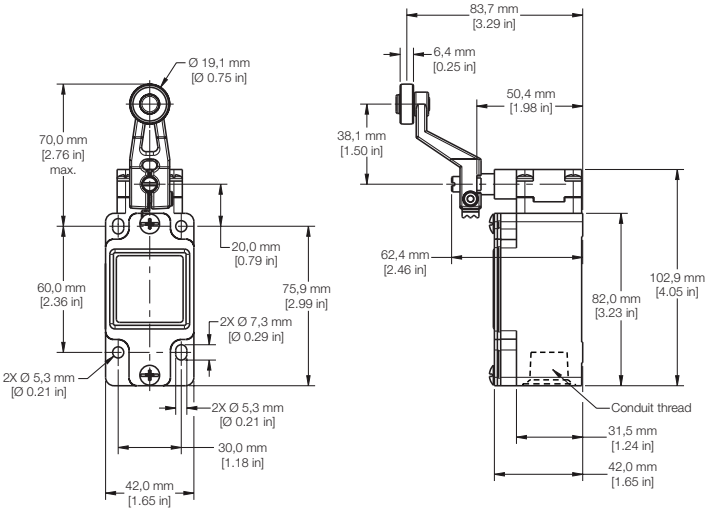

Figure 6. GSC/GSD Pin Plunger (Head Code B) Dimensions

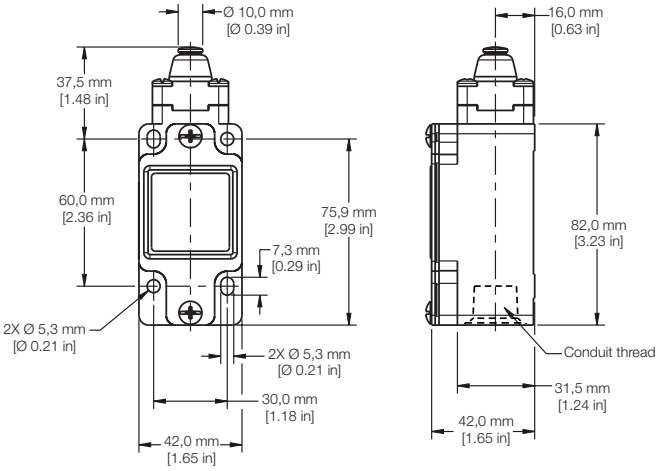

Figure 7. GSC/GSD Roller Plunger (Head Code C) Dimensions

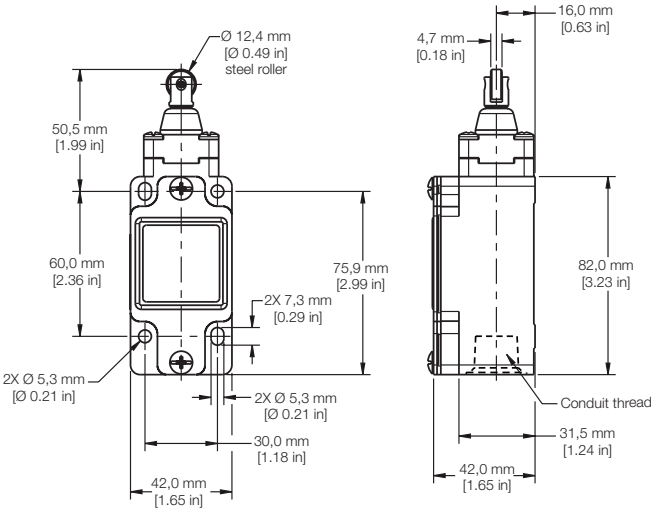

Figure 8. GSC/GSD Roller Arm (Head Code D) Dimensions

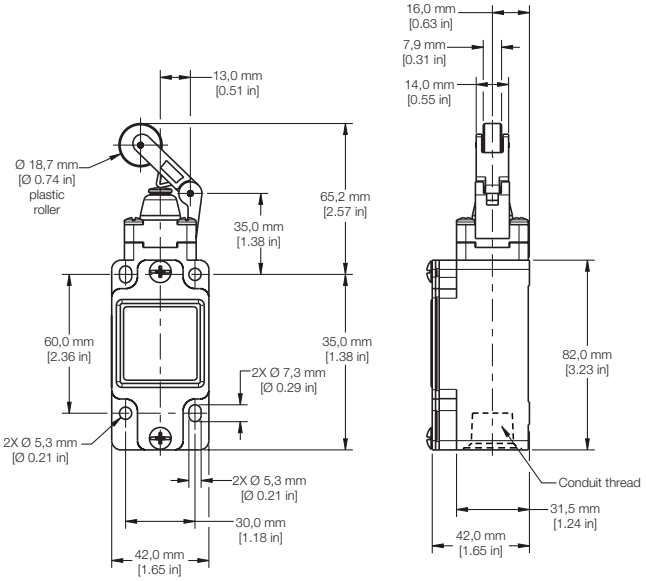

Figure 9. GSC/GSD Pin Plunger (Head Code R) Dimensions

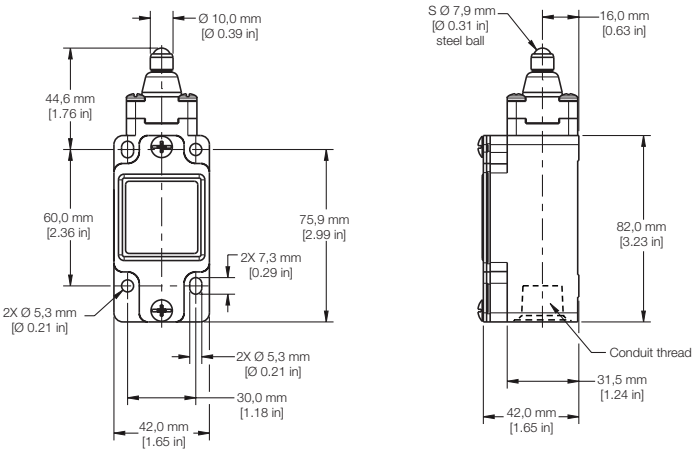

Figure 10. GSC/GSD Series with Hinge Overall Dimensions mm [in]

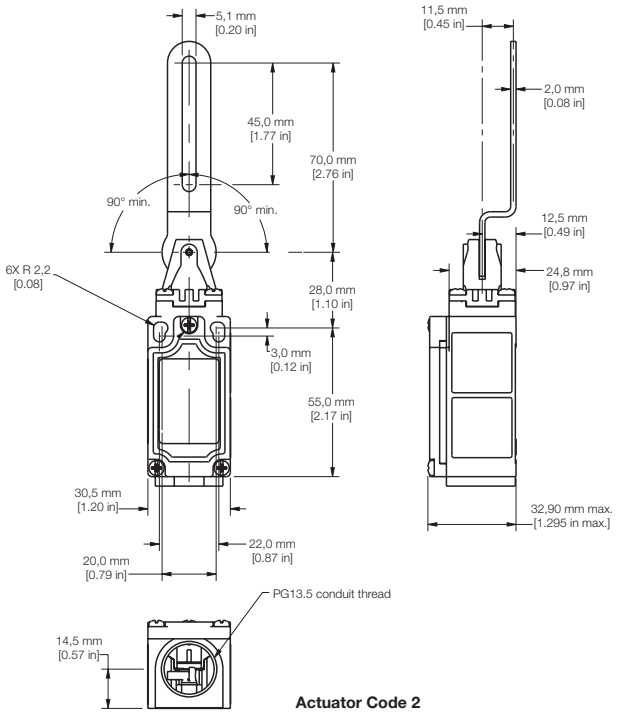

Actuator Code 2

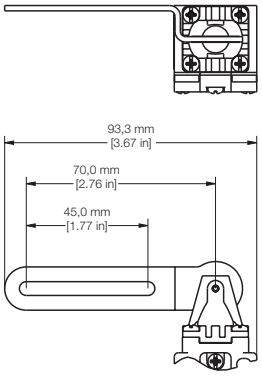

Actuator Code 1

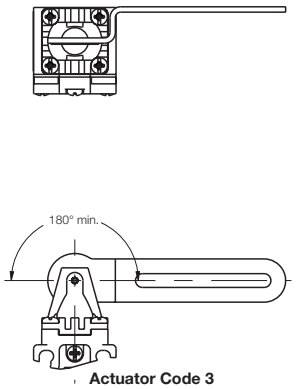

Actuator Code 3

Figure 11. GSE Series with Hinge Overall Dimensions mm [in]

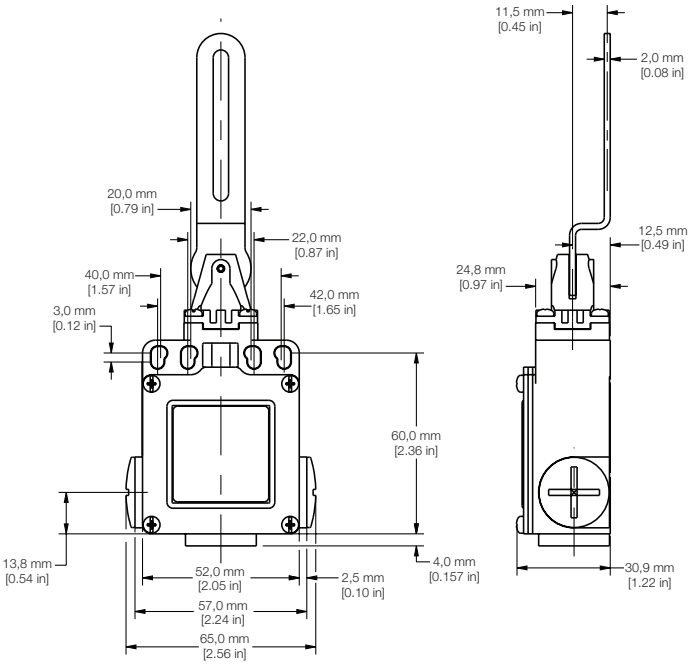

Actuator Code 2

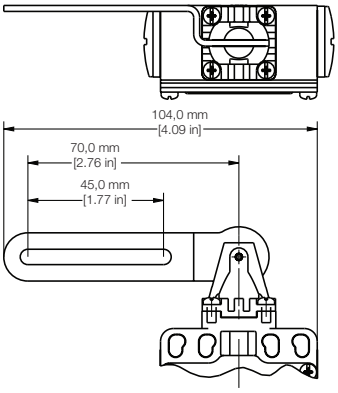

Actuator Code 1

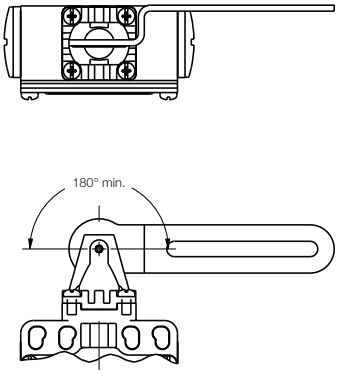

Actuator Code 3

ADDITIONAL MATERIALS

The following associated literature is available on the Honeywell web site at sensing.honeywell.com:

- Product installation instructions
- Product range guide
- Product line guide

Find out more

Honeywell serves its customers through a worldwide network of sales offices, representatives and distributors. For application assistance, current specifications, pricing or name of the nearest Authorized Distributor, contact your local sales office. To learn more about Honeywell's sensing and switching products, call **+1-815-235-6847 or 1-800-537-6945,** visit **sensing.honeywell.com,** or e-mail inquiries to **info.sc@honeywell.com**

⚠ WARNING
RISK TO LIFE OR PROPERTY

Never use this product for an application involving serious risk to life or property without ensuring that the system as a whole has been designed to address the risks, and that this product is properly rated and installed for the intended use within the overall system.

Failure to comply with these instructions could result in death or serious injury.

⚠ WARNING
MISUSE OF DOCUMENTATION

- The information presented in this product sheet is for reference only. Do not use this document as a product installation guide.
- Complete installation, operation, and maintenance information is provided in the instructions supplied with each product.

Failure to comply with these instructions could result in death or serious injury.

Warranty/Remedy

Honeywell warrants goods of its manufacture as being free of defective materials and faulty workmanship. Honeywell's standard product warranty applies unless agreed to otherwise by Honeywell in writing; please refer to your order acknowledgement or consult your local sales office for specific warranty details. If warranted goods are returned to Honeywell during the period of coverage, Honeywell will repair or replace, at its option, without charge those items it finds defective. **The foregoing is buyer's sole remedy and is in lieu of all other warranties, expressed or implied, including those of merchantability and fitness for a particular purpose. In no event shall Honeywell be liable for consequential, special, or indirect damages.**

While we provide application assistance personally, through our literature and the Honeywell web site, it is up to the customer to determine the suitability of the product in the application.

Specifications may change without notice. The information we supply is believed to be accurate and reliable as of this printing. However, we assume no responsibility for its use.

Honeywell Sensing and Productivity Solutions
9680 Old Bailes Road
Fort Mill, SC 29707
honeywell.com

Honeywell

004791-1-EN IL50 GLO
March 2016